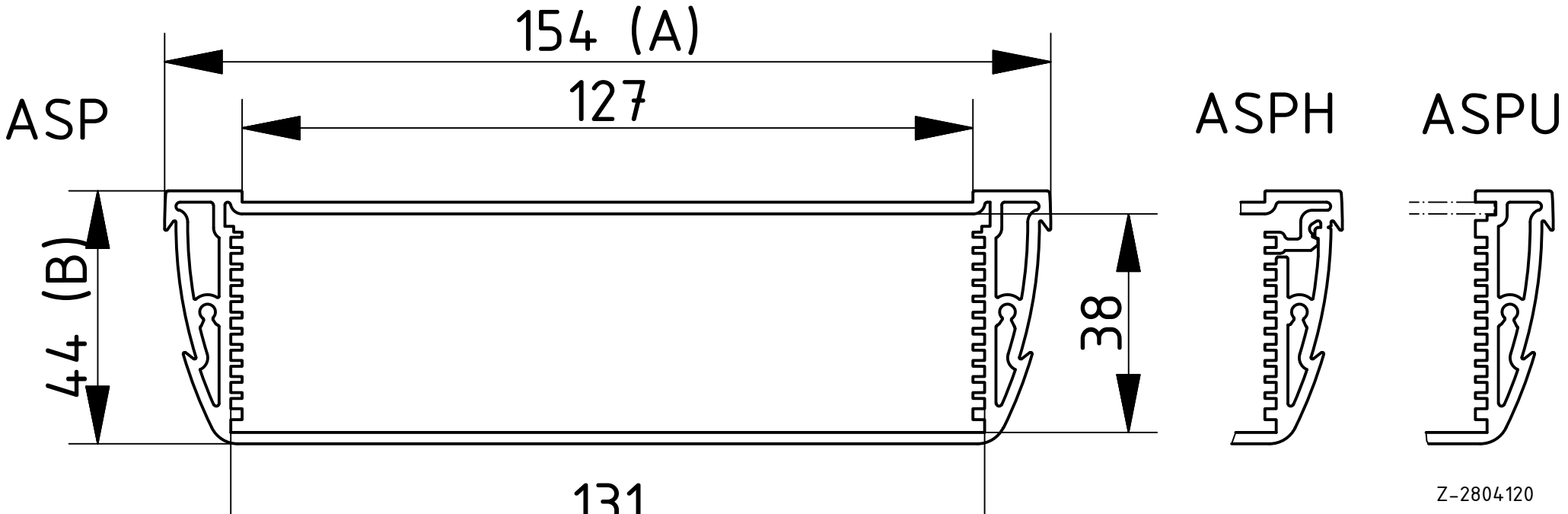
154 (A)
127
ASP
ASPH
ASPU
44 (B)
38
131
Z-2804120