"Schutzvermerk nach DIN ISO 16016 beachten" "Please pay attention to copyright note DIN ISO 16016"

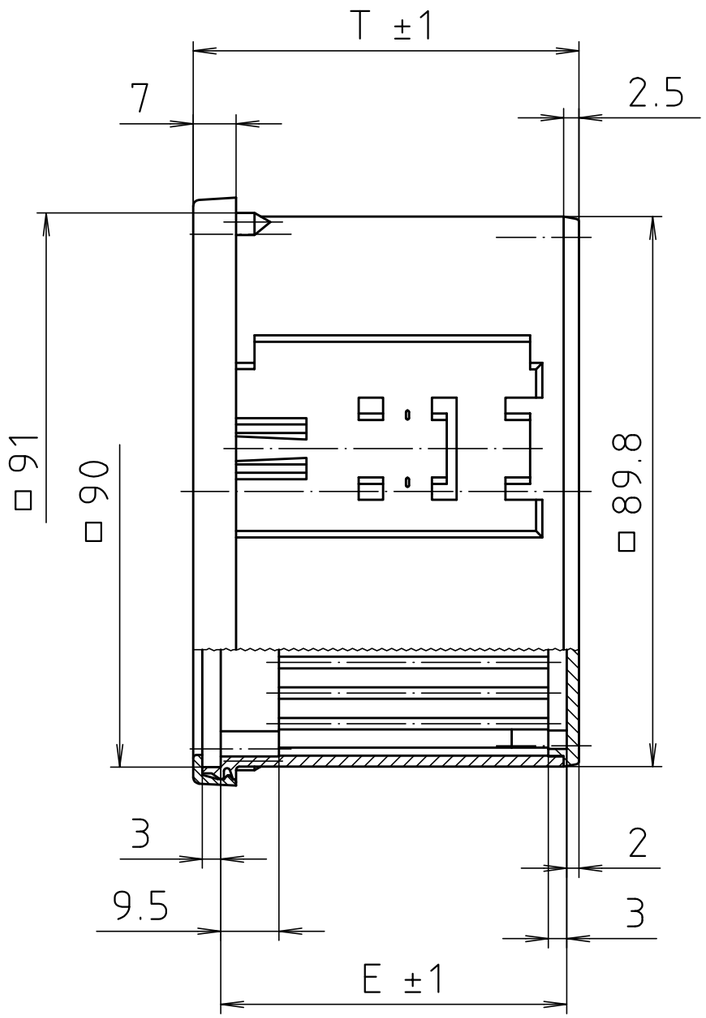

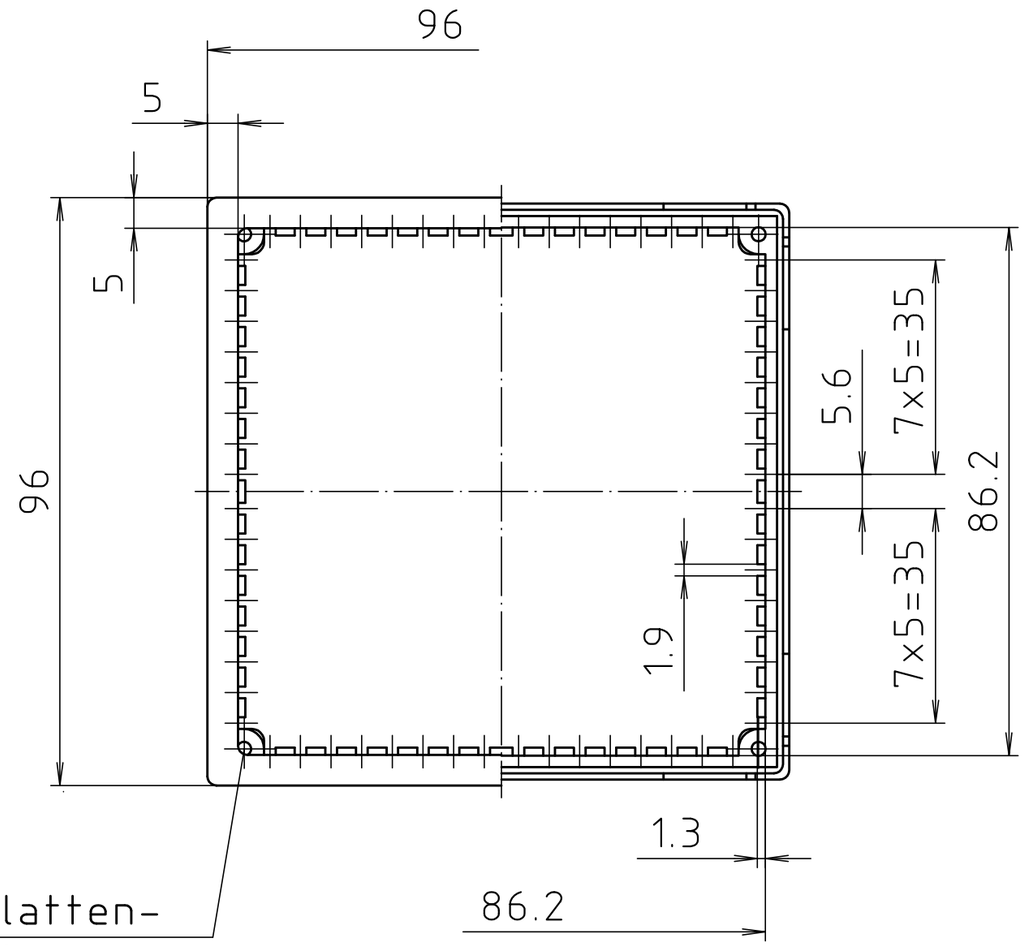

Frontplatten-
befestigung
84mm x 84mm/
front panel
fixing points
84mm x 84mm

Gehäuse/ *enclosure*	T	E
NGS 9606	63	56.5
NGS 9608	85	78.5
NGS 9610	109.5	103
NGS 9611	119	112.5
NGS 9613	141	134.5
NGS 9616	165.5	159

Maßstab/ *Scale:* 1:1

Zeichnungs-Nr. / *Drawing-No.:*
3G 0096.060.02

Artikel / *Article:*
NGS 96
Katalogzeichnung/
Catalogue drawing

Ä.Nr/ *Alt-No.:* –
Datum/ *Date:* –

BOPLA
A Phoenix Mecano Company

DISK: 2 600 829
Datum/*Date:* 23.01.92 SM