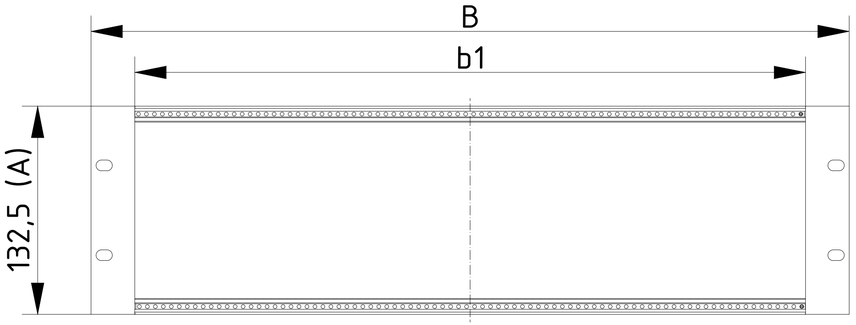

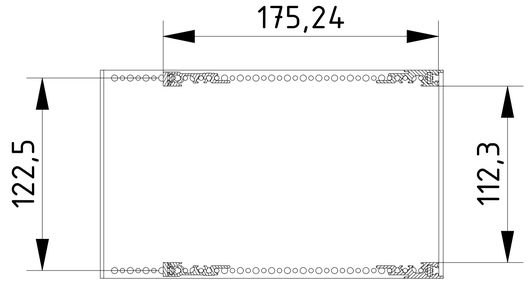
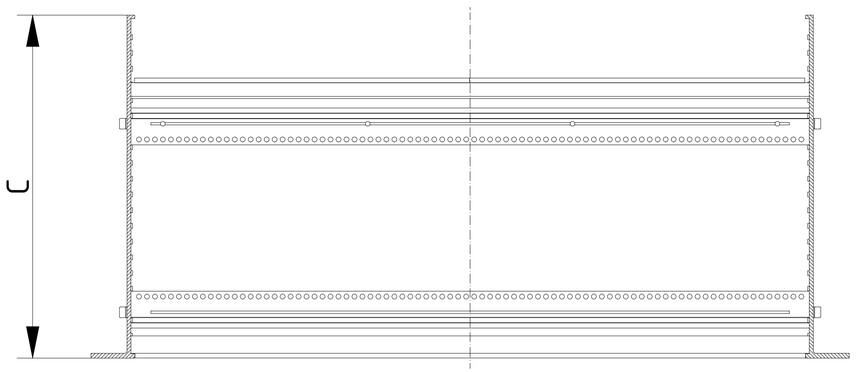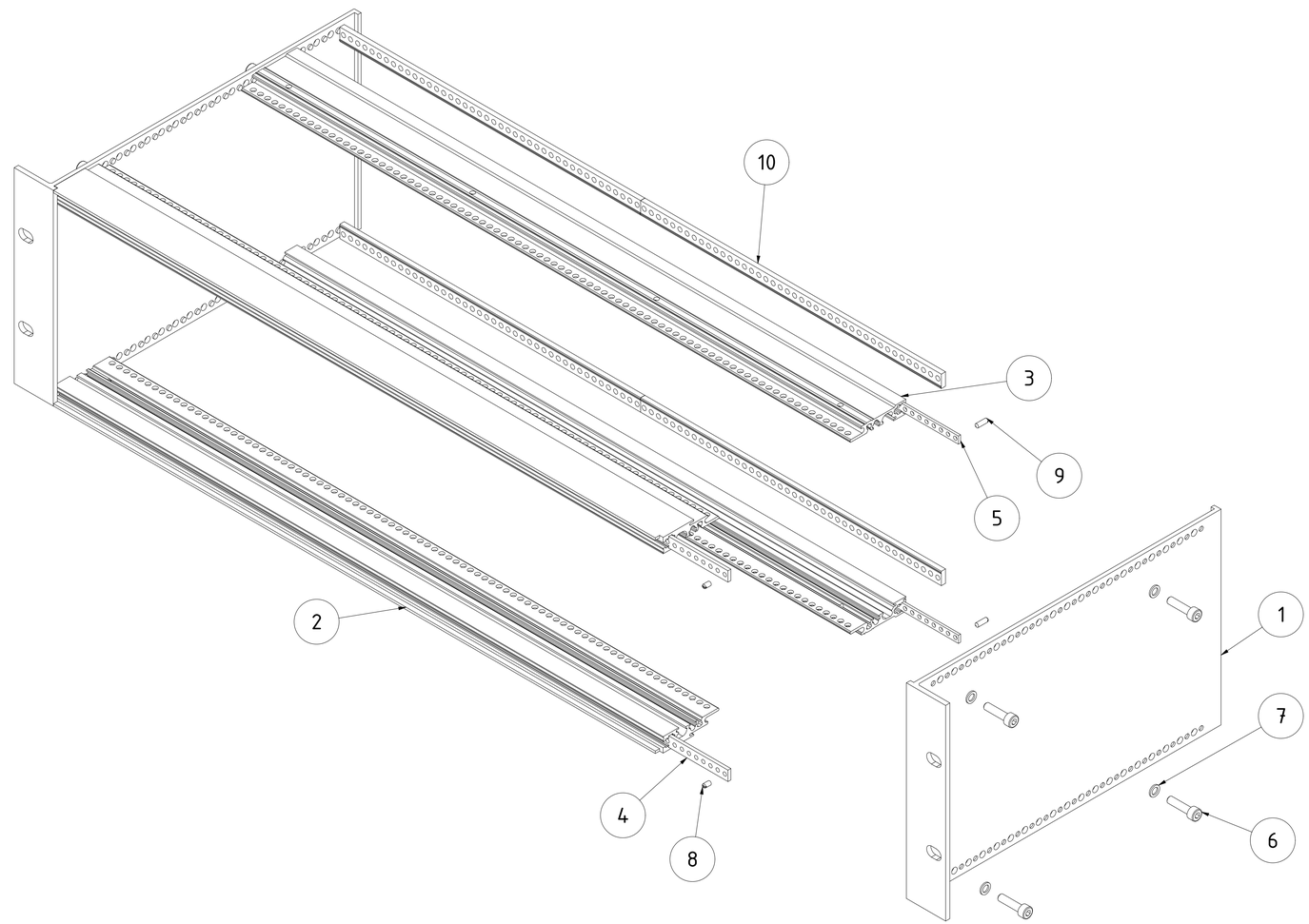
Z-2903314