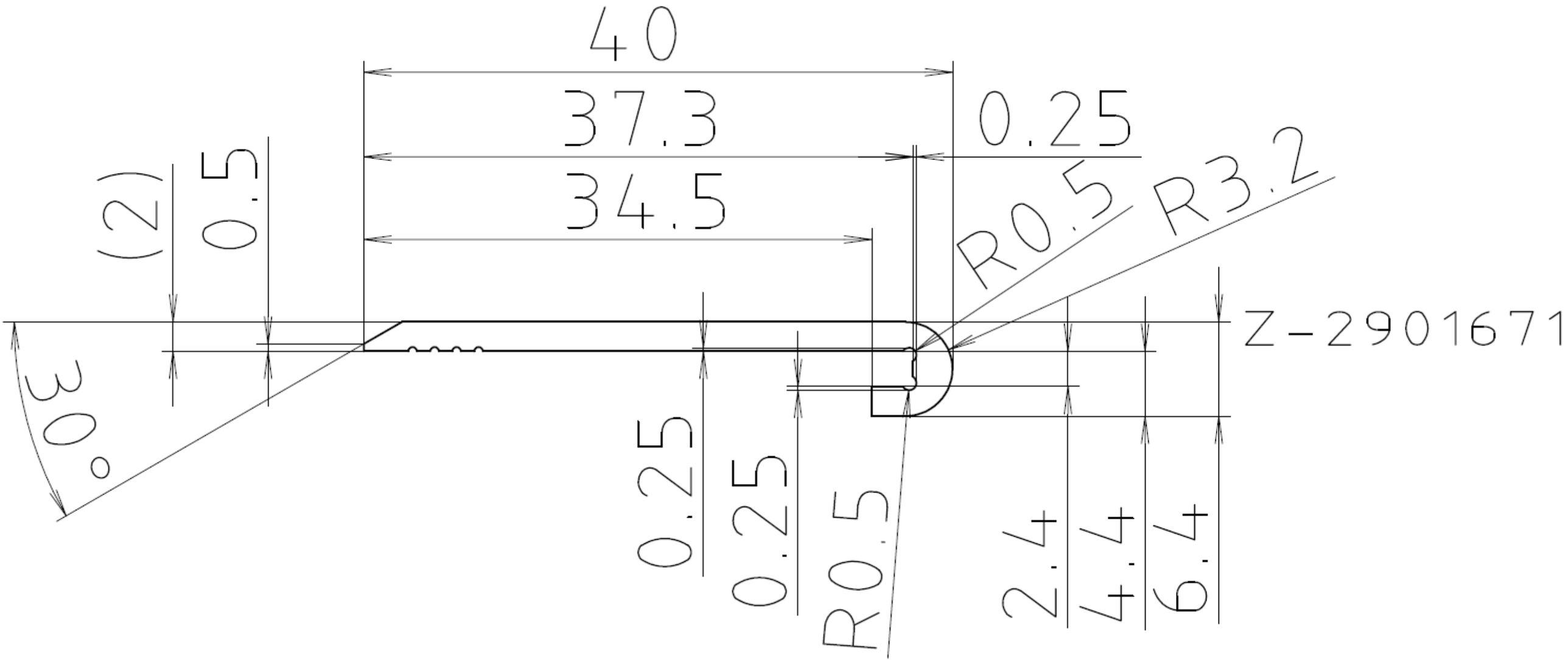
40
37.3
34.5
0.25
(2)
0.5
R0.5
R3.2
Z-2901671
30°
0.25
0.25
R0.5
2.4
4.4
6.4